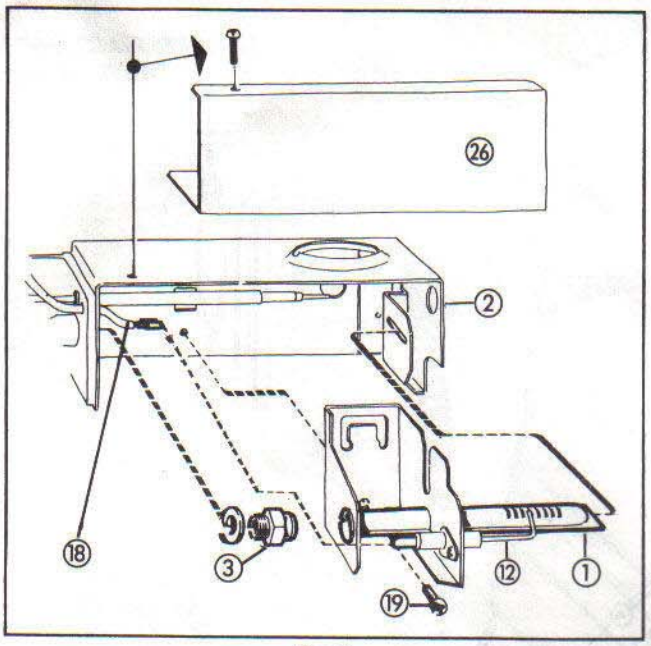

Fig. 2

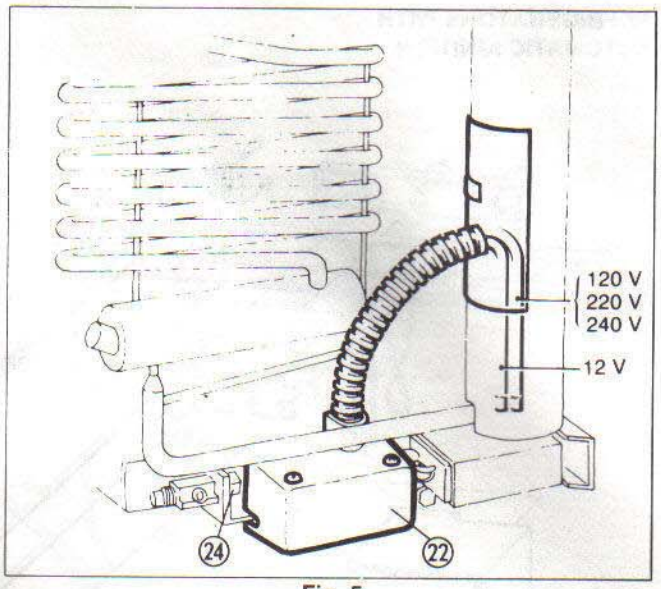

Fig. 5

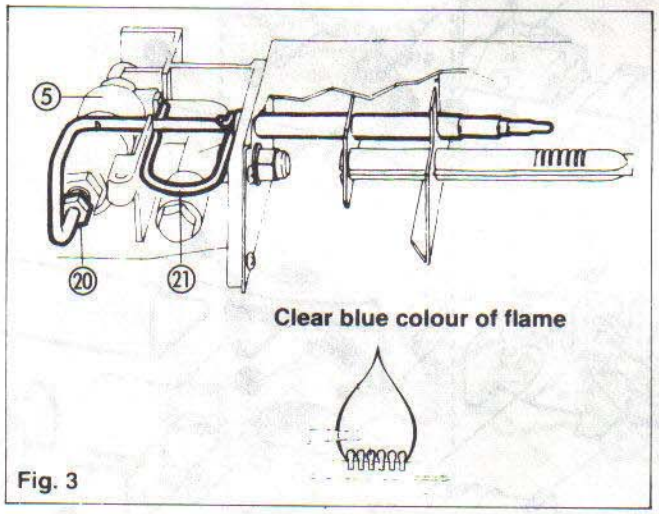

Fig. 3

Gas equipment parts

1. Burner tube
2. Burner housing
3. Burner jet
4. Feeler point (thermocouple)
5. Flame failure safety device
6. Bypass screw
7. Gas/Electrical thermostat
8. Pressure test gage connection
9. Capillary tube for thermostat
10. Shut-off valve
11. Piezo igniter (lighter)
12. Electrode
19. Burner fixing screw
24. Hexagon nut
26. Cover plate

Electric equipment parts

13. Flexible cord
14. Change-over switch
15. Terminal block, 12 V DC
16. Reigniter
17. Relay
18. Lighter cable
22. Cover
23. Terminal block, 12 V DC, on certain models only